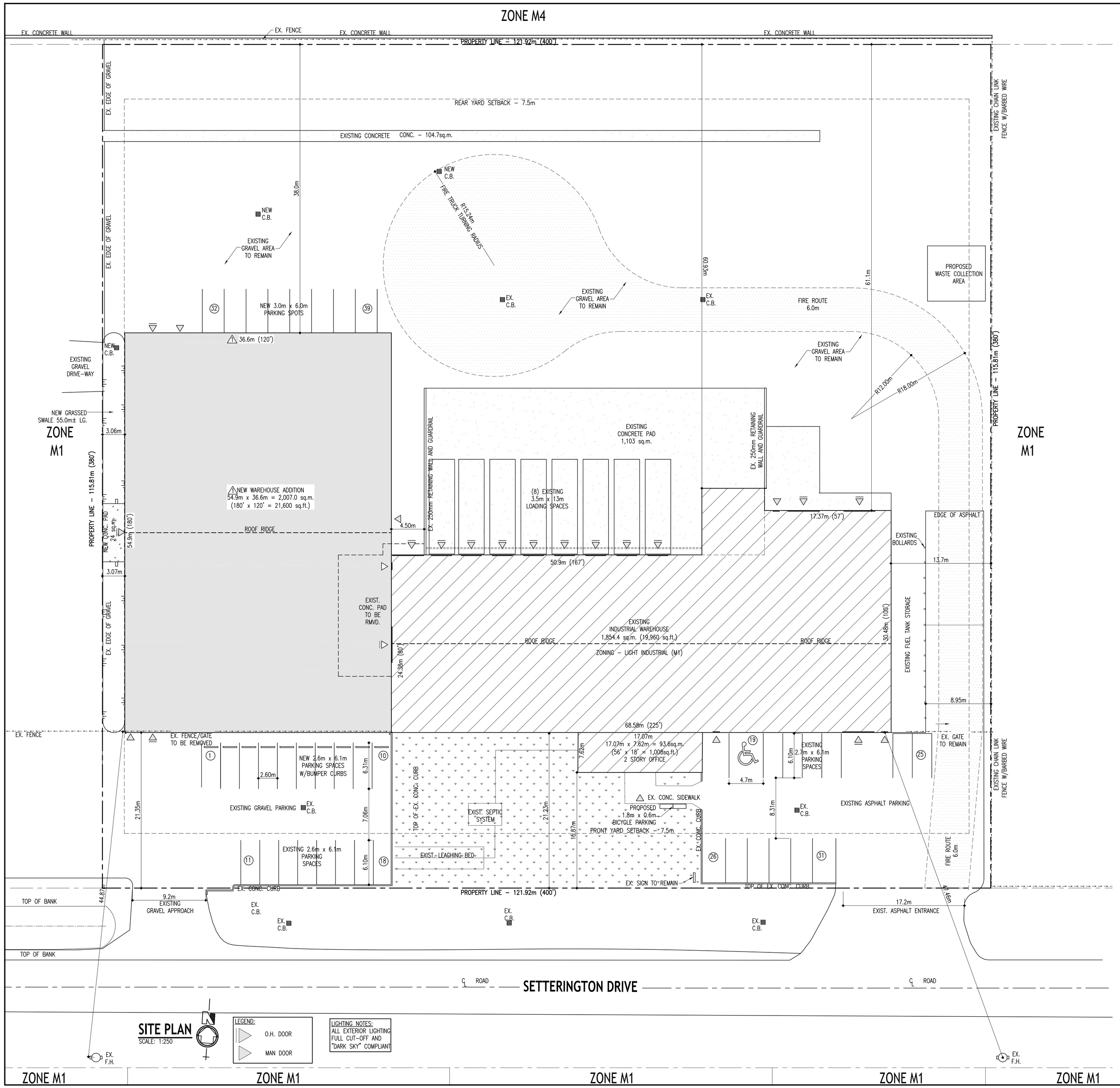

SITE PLAN

SCALE: 1:250

LEGEND:
- O.H. DOOR
- MAN DOOR

LIGHTING NOTES:
ALL EXTERIOR LIGHTING FULL CUT-OFF AND "DARK SKY" COMPLIANT

ZONE M1 | ZONE M1 | ZONE M1 | ZONE M1 | ZONE M1

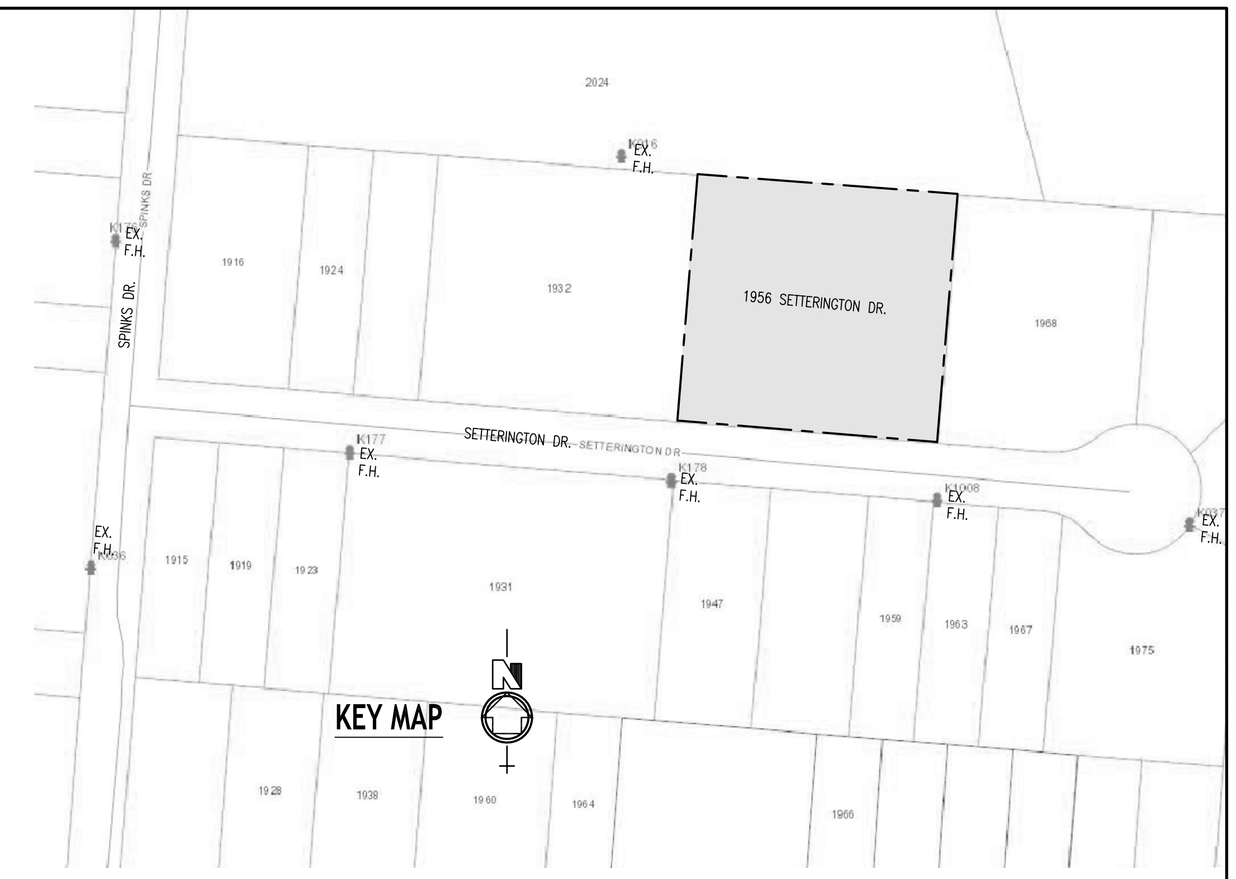

SITE DATA FOR UNIVERSAL FABRICATION PROPERTY ZONING LIGHT INDUSTRIAL (M1)		
PROPOSED USE	REQUIREMENTS– (M1)	ACTUAL
LOT AREA (min.)	1,300sq.m. (14,000sq.ft.)	13,749.7sq.m. (148 000sq.ft.)
LOT FRONTAGE (min.)	24m (80ft.)	121.92m (400ft.)
OPEN SPACE (min.)	15%	
LOT COVERAGE (max.)	50%	PROPOSED – 35.5%
FRONT YARD SETBACK	7.5m (25ft.)	EXISTING – 15.87m (52ft.)
REAR YARD SETBACK	7.5m (25ft)	PROPOSED – 38.0m (125ft.)
INTERIOR SIDE YARD EAST	3.0m (10')	EXISTING – 13.7m (45ft.)
INTERIOR SIDE YARD WEST	3.0m (10')	PROPOSED – 3.06m (11ft.)

PARKING REQUIREMENTS		
WAREHOUSE PARKING SPACE (2.7m x 6.0m SPACES)	1 SPACE PER 200 sq.m. (WAREHOUSE)	= 2007/200 = 11 REQUIRED
OFFICE SPACE (2.7m x 6.0m SPACES)	1 SPACE PER 40 sq.m. (OFFICE)	= 187.2/40.0 = 5 REQUIRED
INDUSTRIAL SPACE (2.7m x 6.0m SPACES)	1 SPACE PER 100 sq.m. (WAREHOUSE)	= 1854.4/100 = 19 REQUIRED
TOTAL PARKING SPACES REQUIRED – 35		PARKING SPACES PROVIDED – 38
TOTAL B.F. PARKING SPACE REQUIRED – 1		B.F. PARKING SPACE PROVIDED – 1
TOTAL LOADING SPACES REQUIRED – 3		LOADING SPACES PROVIDED – 8

BUILDING DATA	
BUILDING	AREA m^2 (ft^2)
EXIST. INDUSTRIAL WAREHOUSE	1,854.4 sq.m. (19,960 sq.ft.)
EXIST. OFFICE BUILDING	93.6 sq.m. (1,008 sq.ft.)
PROPOSED BUILDING EXPANSION	2,007 sq.m. (21,600 sq.ft.) 1
TOTAL	3,955 sq.m. (42,568 sq.ft.)

REVISIONS	ISSUED FOR	DATE
	OWNER APPROVAL	FEB. 18/2016
1	PROPOSED BUILDING WIDTH ADJUSTED	JULY 20/2017
	SITE PLAN AMENDMENT	AUG. 9/2017
	OWNER APPROVAL	JAN. 23/2018
	STORM WATER MANAGEMENT	JAN. 31/2018

CONTRACTOR:

PROJECT:

NEW WAREHOUSE ADDITION
FOR
UNIVERSAL FABRICATING

1956 SETTERINGTON DR. (LOT 12, CONCESSION III E.D.) KINGSVILLE, ONTARIO

SHEET TITLE:

SITE PLAN

LICENSED PROFESSIONAL ENGINEER 01/31/18 M.K.MCFADDEN 100098313 PROVINCE OF ONTARIO

Y.C. LIU ENGINEERING
39 McNAUGHTON AVE., WEST
CHATHAM, ONTARIO N7L 1B2
TEL: (519) 351-0612
FAX: (519) 351-5538

DRAWN	CHECKED	FILE NO.	DWG. NO.
C.W.	C.L.	16–023	1
BCIN	FIRM BCIN	DATE	SHEET NO.
20529	29635	FEB/16	SP–1 of 2

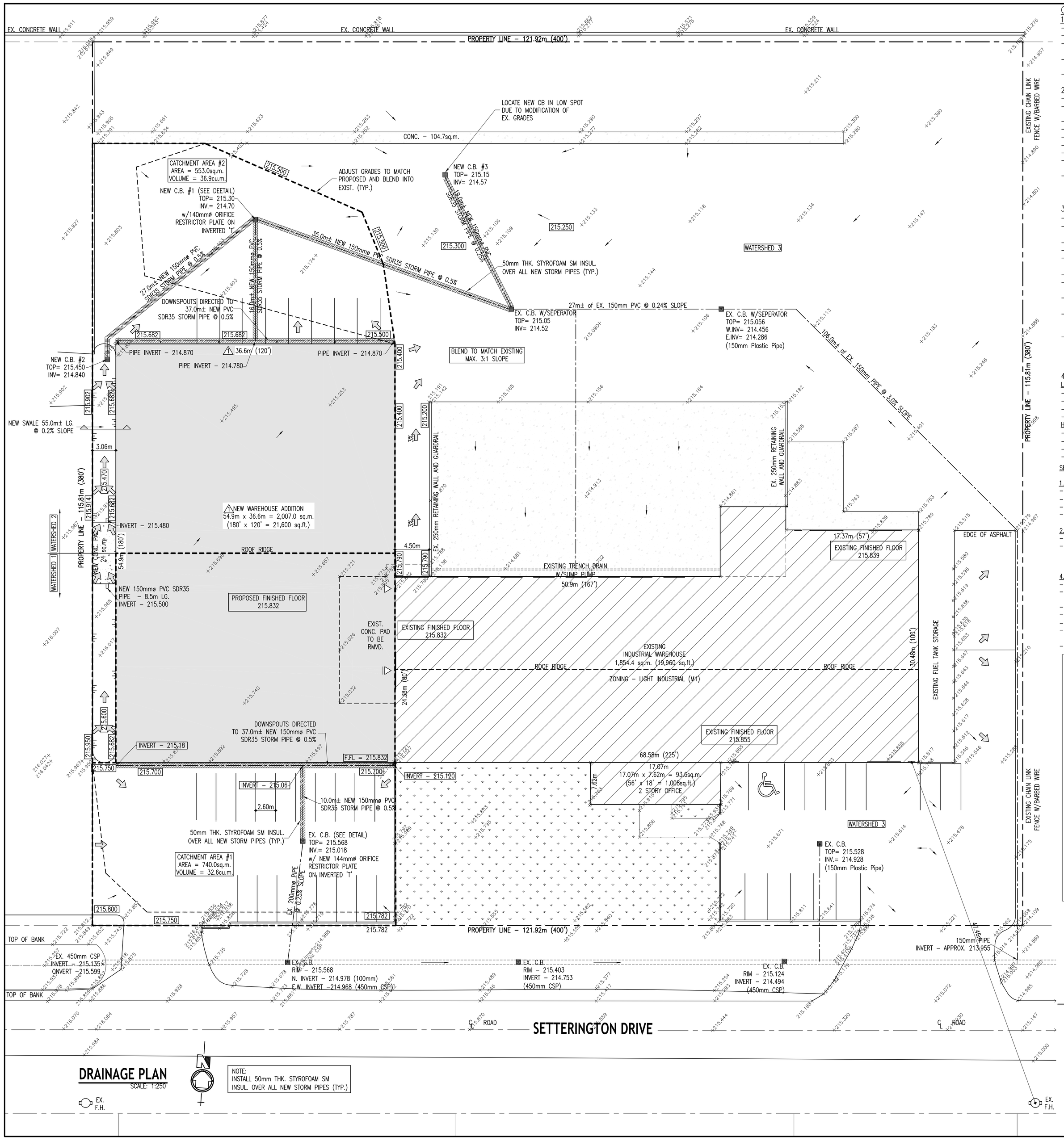

DRAINAGE PLAN

SCALE: 1:250

NOTE:
INSTALL 50mm THK. STYROFOAM SM INSUL. OVER ALL NEW STORM PIPES (TYP.)

CONSTRUCTION NOTES:

1. GENERAL
- SITE PLAN PROVIDED BY Y.C. LIU ENGINEERING
- TOPOGRAPHIC SURVEY BY Y.C. LIU ENGINEERING
- ALL WORKS TO BE COMPLETED IN ACCORDANCE WITH STANDARDS AND SPECIFICATIONS, AND THE MINISTRY OF THE ENVIRONMENT AND ENERGY GUIDELINES (LATEST EDITION)
- THE CONTRACTOR IS RESPONSIBLE FOR LOCATING AND PROTECTING ALL EXISTING UTILITIES PRIOR TO AND DURING CONSTRUCTION
- CONTRACTOR RESPONSIBLE FOR OBTAINING ALL NECESSARY PERMITS PRIOR TO THE START OF CONSTRUCTION

2. EROSION CONTROL MEASURE NOTES:
- PROTECT ALL EXPOSED SURFACES AND CONTROL ALL RUNOFF DURING CONSTRUCTION
- ALL EROSION CONTROL MEASURES ARE TO BE IN PLACE BEFORE STARTING CONSTRUCTION AND REMAIN UNTIL RESTORATION IS COMPLETE
- MAINTAIN EROSION CONTROL MEASURES DURING CONSTRUCTION
- ALL COLLECTED SEDIMENT MUST BE DISPOSED OF AT AN APPROVED LOCATION
- PROTECT ALL CB'S, MANHOLES AND PIPE ENDS FROM SEDIMENT INTRUSION WITH GEOTEXTILE (TERRAFIX 270R)
- KEEP ALL SUMPS CLEAN DURING CONSTRUCTION
- PREVENT WIND BLOWN DUST
- OBTAIN APPROVAL FROM CONSERVATION AUTHORITY PRIOR TO CONSTRUCTION FOR WORKS WHICH ARE IN, OR ADJACENT TO FLOODLINES, FILL LINES, AND HAZARDOUS SLOPES
- ALL SILT FENCING AND DETAILS, ALL OF THE ABOVE NOTES AND ANY SEDIMENT & EROSION CONTROL MEASURES ARE A THE MINIMUM TO BE IN ACCORDANCE WITH THE M.N.R. GUIDELINES ON EROSION AND SEDIMENT CONTROL FOR URBAN CONSTRUCTION SITES

3. FIRE ROUTES (O.B.C SUBSECTION 3.2.5.)
- LOCATED NOT LESS THAN 3m (9'–10") AND NOT MORE THAN 15m (49'–3") FROM THE BUILDING
- FIRE HYDRANT TO BE MAX. 45m (147'–8" TO THE FIRE DEPARTMENT CONNECTION AND 90m (295'–3") TO PRINCIPLE ENTRANCE WHEN NO FIRE CONNECTIONS ARE REQUIRED
- OVERHEAD CLEARANCE NOT LESS THAN 5m (16'–5")
- CHANGE IN GRADIENT NOT MORE THAN 1 IN 12.5m OVER A MINIMUM DISTANCE OF 15m
- MUST BE DESIGNED TO SUPPORT THE EXPECTED LOADS IMPOSED BY FIRE FIGHTING EQUIPMENT AND BE SURFACED WITH CONCRETE, ASPHALT, OR OTHER MATERIAL DESIGNED TO PERMIT ACCESSIBILITY UNDER ALL CLIMATIC CONDITIONS
- HAVE TURNAROUND FACILITIES FOR ANY DEAD–END PORTION OF THE ACCESS ROUTE MORE THAN 90m (295'–3") LONG
- HAVE ACCESS OPENINGS EVERY 15m (49'–3") ON WALLS REQUIRED TO FACE A FIRE ROUTE UNLESS BUILDING IS SPRINKLERED
- FIRE ROUTE SIGNS TO BE MOUNTED 3m IN HEIGHT MEASURED FROM THE TOP LIMIT OF THE SIGN TO THE GRADE OF THE FIRE ROUTE SURFACE ADJACENT TO THE FIRE ROUTE SIGN
- SIGNS TO BE SPACED NOT MORE THAN 30m (100ft.) BETWEEN SIGNS LOCATED ON THE SAME SIDE OF THE FIRE ROUTE AND SPACED SUCH THAT AT LEAST TWO SIGNS ARE CLEARLY VISIBLE AND LETTERING IS LEGIBLE FROM ALL LOCATIONS WITHIN THE FIRE ROUTE
- THE PROPERTY OWNER IS RESPONSIBLE TO ENSURE THAT PHYSICAL OBSTRUCTIONS ARE NOT PLACED OR CONSTRUCTED IN LOCATIONS THAT INTERFERE WITH THE VISIBILITY AND/OR LEGIBILITY OF ANY FIRE ROUTE SIGN AND TO ENSURE SUFFICIENT MAINTENANCE OF VEGETATION SUCH THAT UNOBSTRUCTED VIEWS FROM ALL FIRE ROUTE SIGNS ARE MAINTAINED AT ALL TIMES AND UNDER ALL CIRCUMSTANCES

4. RECOMMENDED MINIMUM PAVEMENT STRUCTURE FOR ASPHALT SURFACES:

LIGHT DUTY:
- 150mm GRANULAR 'A' COMPACTED TO 100% S.P.M.D.D.
- 300mm GRANULAR 'B' COMPACTED TO 100% S.P.M.D.D.
- 40mm HL3 SURFACE ASPHALT COMPACTED TO 92–97% M.R.D.
- 50mm HL8 BINDER ASPHALT COMPACTED TO 92–97% M.R.D.

HEAVY DUTY:
- 200mm GRANULAR 'A' COMPACTED TO 100% S.P.M.D.D.
- 400mm GRANULAR 'B' COMPACTED TO 100% S.P.M.D.D.
- 50mm HL3 SURFACE ASPHALT COMPACTED TO 92–97% M.R.D.
- 75mm HL8 BINDER ASPHALT COMPACTED TO 92–97% M.R.D.

SERVICING NOTES:

1. SEWERS
- BACKFILL AND SEWER BEDDING AS PER OPSD 802.010, 802.013, 802.014
- ALL BEDDING AND COVER MATERIAL TO BE GRANULAR 'A' OR 19mm CRLS COMPACTED TO 95% SPMDD
- STORM SEWER PIPE TO BE PVC SDR 35 OR BOSS 2000
- SANITARY SEWER PIPE TO BE PVC SDR 28

2. MANHOLES/CATCHBASINS
- PRECAST CATCHBASINS AS PER OPSD 705.010 WITH FRAME AND GRATE
- MINIMUM HORIZONTAL CLEARANCE BETWEEN SEWER AND WATER SERVICE IS 2.5m. WHERE THE WATERMAIN PASSES OVER THE SEWER, MINIMUM VERTICAL CLEARANCE IS 0.15m AND 0.50m WHERE THE WATERMAIN PASSES UNDER THE SEWER

4. GRADING NOTES
- EXISTING GROUND ELEVATIONS TO BE MAINTAINED ALONG PERIMETER OF SITE UNLESS SPECIFIED OTHERWISE
- ALL DISTURBED AREAS TO BE REINSTATED TO EXISTING CONDITIONS OR BETTER. LANDSCAPE AREAS TO BE RESTORED WITH 100mm TOPSOIL AND No. 1 NURSERY SOD
- EMBANKMENTS MAXIMUM SLOPE OF 3:1
- GRASS SURFACE MINIMUM SLOPE 1.5%
- ASPHALT PAVEMENT/CONCRETE SURFACES MINIMUM SLOPE 1.0%
- ALL SURFACE DRAINAGE SHALL BE SELF CONTAINED, COLLECTED, AND DISCHARGED AT A LOCATION TO BE APPROVED PRIOR TO THE ISSUANCE OF A BUILDING PERMIT
- DRAINAGE OF ABUTTING PROPERTIES SHALL NOT BE ADVERSELY AFFECTED

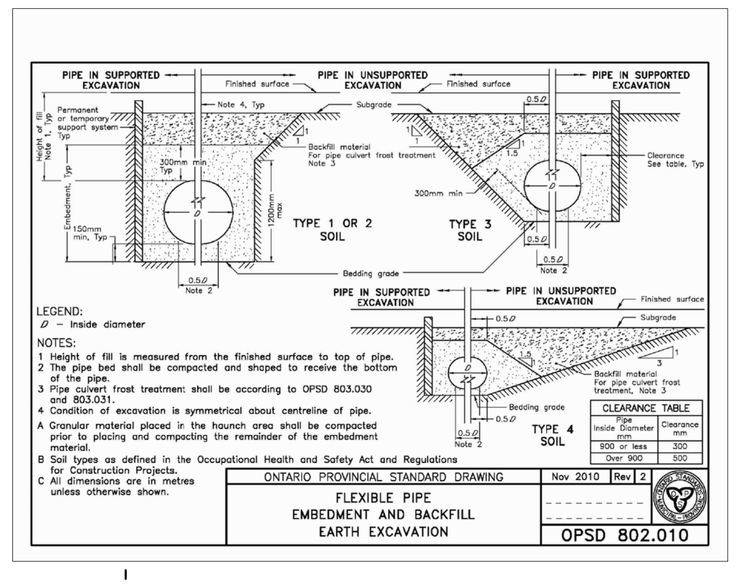

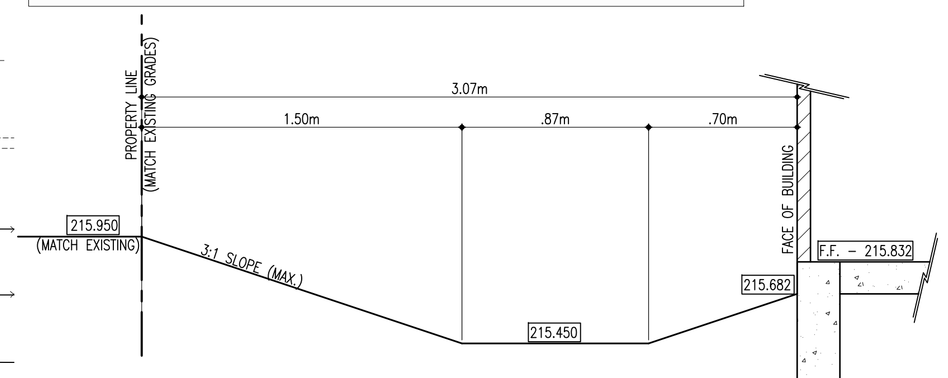

SWALE PROFILE A-A

SCALE: 1:20

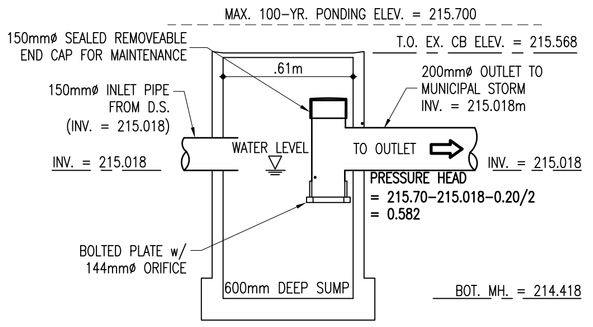

EX. CB DETAIL

SCALE: 1:20

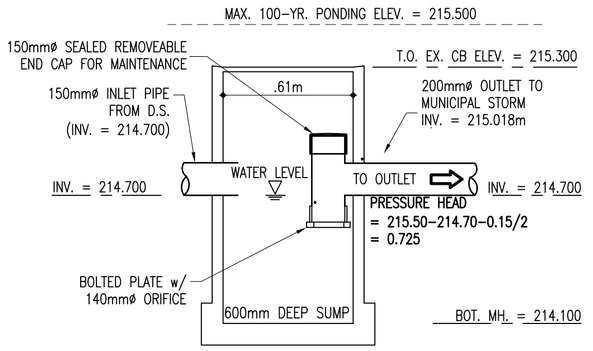

NEW CB#1 DETAIL

SCALE: 1:20

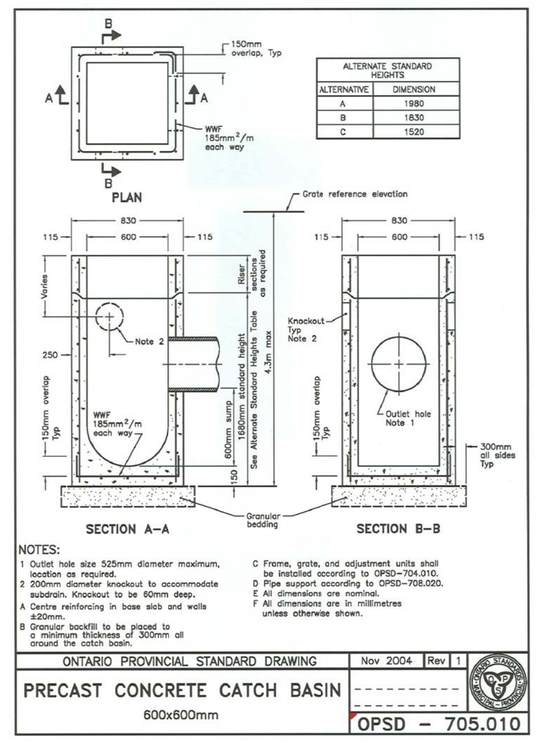

REVISIONS	ISSUED FOR	DATE
	OWNER APPROVAL	FEB. 18/2016
1	PROPOSED BUILDING WIDTH ADJUSTED	JULY 20/2017
	SITE PLAN AMENDMENT	AUG. 9/2017
	OWNER APPROVAL	JAN. 23/2018
	STORM WATER MANAGEMENT	JAN. 31/2018

CONTRACTOR:

PROJECT:

NEW WAREHOUSE ADDITION FOR UNIVERSAL FABRICATING

1956 SETTERINGTON DR. (LOT 12, CONCESSION III E.D.) KINGSVILLE, ONTARIO

SHEET TITLE:

DRAINAGE PLAN

LICENSED PROFESSIONAL ENGINEER 01/31/18 M.K.MCFADDEN 100098313 PROVINCE OF ONTARIO

Y.C. LIU ENGINEERING
20 McMASTER AVE., WEST
CHATHAM, ONTARIO N7L 1B2
TEL: (519) 351–8612
FAX: (519) 351–5526

DRAWN	CHECKED	FILE NO.	DWG. NO.
C.W.	C.L.	16–023	2
BCIN	FIRM BCIN	DATE	SHEET NO.
20529	29635	FEB/16	SP–2 of 2